FireLock NXT™ Alternate Wet/Dry Valve

SEE VICTAULIC PUBLICATION 10.01 FOR DETAILS

SERIES 764

This patent-pending Victaulic FireLock NXT Series 764 Alternate Valve is a low-differential, latched clapper valve that uses a unique direct-acting diaphragm to separate system water supplies from dry-pipe sprinkler systems. This valve offers a trim system that accommodates both wet and dry systems and is field-convertible.

PATENT PENDING

FEATURES

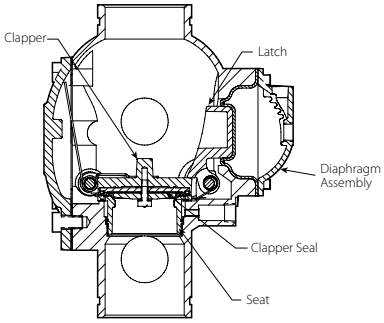

Exaggerated for Clarity

The low-differential latch and actuator design allows the valve to be reset without opening and is not subject to water columns.

The valve allows the water to operate a water motor alarm and/or electric pressure alarms, which operate until the flow of water stops.

An optional accelerator is available when larger systems require a faster response.

The valve is available for 1 ½ – 8"/40 – 200 mm pipe sizes and is rated to: UL, FM to 300 psi/2068 kPa and LPCB to 232 psi/1600 kPa due to the esoteric wet valve requirements. Required air pressure is 13 psi/90 kPa.

The valve is grooved x grooved. Standard grooving dimensions conform to ANSI/AWWA C606.

The Series 764 valve is made of high-strength, low-weight ductile iron and offers easy access to all internal parts, even after installation. All internal parts are replaceable. The rubber clapper seal can be easily replaced without removing the clapper from the valve. The valve is painted inside and out to increase corrosion resistance.

The body is tapped for main drain and all available trim configurations. It is available bare, or in the following configurations:

Pre-Trimmed

Compact, pre-assembled trim for both wet and dry systems can be specified for this valve. See below for envelope dimensions of this dual-purpose system.

Vic-Quick Riser

(request publication 30.20)

The Vic-Quick Riser comes completely pre-trimmed and includes a shut-off valve (Series 705W butterfly valve – request publication 10.18) for system shut-off, pre-set pressure switches, and a drain kit for ease of installation.

JOB/OWNER	CONTRACTOR	ENGINEER
System No. _____	Submitted By _____	Spec Sect _____ Para _____
Location _____	Date _____	Approved _____
		Date _____

www.victaulic.com

VICTAULIC IS A REGISTERED TRADEMARK OF VICTAULIC COMPANY.© 2007 VICTAULIC COMPANY. ALL RIGHTS RESERVED. PRINTED IN THE USA.

FireLock NXT™ Alternate Wet/Dry Valve

SERIES 764

DIMENSIONS

THE 4"/114.3 mm CONFIGURATION IS SHOWN BELOW
1 1/2" – 2"/48.3 – 60.3 mm configurations contain 3/4"/19 mm NPT drain valves.
21/2" – 3"/73.0 – 88.9 mm configurations contain 1 1/4"/31 mm NPT drain valves.
4 – 8"/114.3 – 219.1 mm CONFIGURATIONS CONTAIN 2"/50 mm NPT DRAIN VALVES.

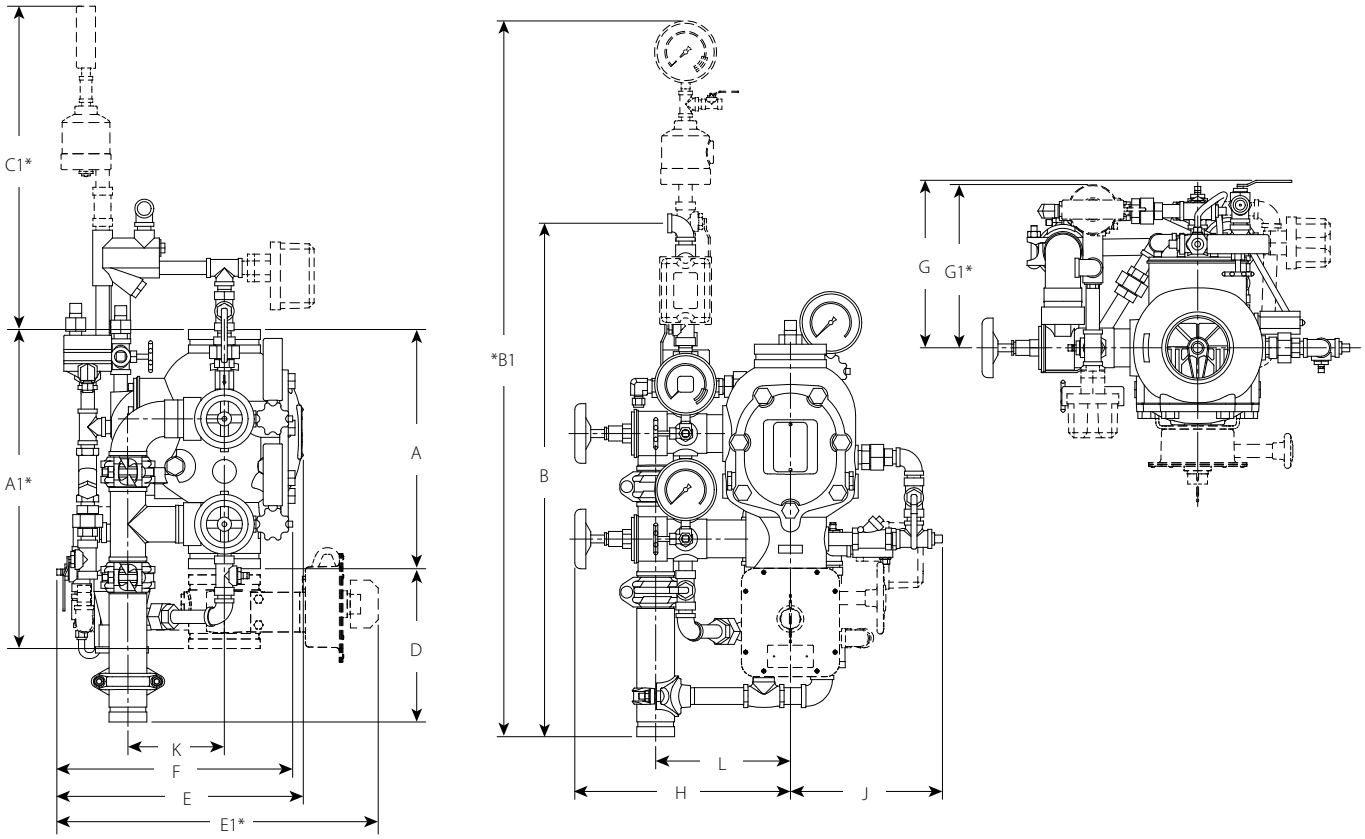

Size		Dimensions – Inches/mm															Approx. Weight Each Lbs./kg	
Nominal Size Inches mm	Actual Outside Dia. Inches mm	A	A1*	B	B1*	C1*	D	E	E1*	F	G	G1*	H	J	K	L	Without Trim	With Trim
1 ½ 40	1.900 48.3	9.00 228.60	16.31 414.27	27.50 698	34.50 876	16.50 419	9.75 247	12.50 317	15.00 381	15.75 400	9.25 234	11.25 285	10.20 259.08	8.50 215.90	3.04 77.21	6.98 177.29	16.7 7.6	43.0 19.5
2 50	2.375 60.3	9.00 228.60	16.31 414.27	27.50 698	34.50 876	16.50 419	9.75 247	12.50 317	15.00 381	15.75 400	9.25 234	11.25 285	10.20 259.08	8.53 216.66	3.04 77.21	6.98 177.29	17.0 7.7	43.0 19.5
76.1 mm	3.00 76.1	12.61 320.29	16.44 417.57	31.75 806	44.25 1123	21.25 539	11.25 285	14.50 368	18.25 463	16.75 425	10.00 254	9.75 247	10.65 270.51	9.04 229.61	3.76 95.50	6.69 169.92	41.0 18.7	65.0 29.5
3 80	3.500 88.9	12.61 320.29	16.44 417.57	31.75 806	44.25 1123	21.25 539	11.25 285	14.50 368	18.75 476	16.75 425	10.00 254	9.75 247	10.65 270.51	9.04 229.61	3.76 95.50	6.69 169.92	41.0 18.7	65.0 29.5
4 100	4.500 114.3	15.03 381.76	19.78 502.41	32.75 831	45.50 1155	21.00 533	10.25 260	16.00 406	20.75 527	15.50 393	11.25 285	10.75 273	13.54 343.91	9.56 242.82	6.06 153.92	8.46 214.88	59.0 26.7	95.0 43.0
165.1 mm	6.500 165.1	16.00 406.40	22.00 558.80	33.00 838	45.75 1162	20.00 508	10.25 260	17.25 438	22.25 565	15.75 400	11.50 292	11.00 279	13.46 341.88	9.94 252.47	6.06 153.92	8.38 212.85	80.0 36.2	116.0 52.6
8 200	8.625 219.1	17.50 444.50	23.01 584.45	33.00 838	45.75 1162	18.75 476	10.00 254	19.00 482	24.25 615	16.00 406	11.75 298	11.00 279	14.80 375.92	11.00 279.40	6.06 153.92	9.72 246.88	122.0 55.3	158.0 71.6

NOTES:
The "A" dimension coupling is not shown in order to clarify dimensional callouts.
Components shown as dotted lines denote optional equipment.
* Measurements denoted with an asterisk take optional equipment into account.
Optional drain connection kit is shown for reference and takeout dimensions.

VICTAULIC IS A REGISTERED TRADEMARK OF VICTAULIC COMPANY. © 2007 VICTAULIC COMPANY. ALL RIGHTS RESERVED. PRINTED IN THE USA.

FireLock NXT™ Alternate Wet/Dry Valve

SERIES 764

PERFORMANCE

Hydraulic Friction Loss

The chart below expresses the flow of water at 65°F/18°C through a full open valve.

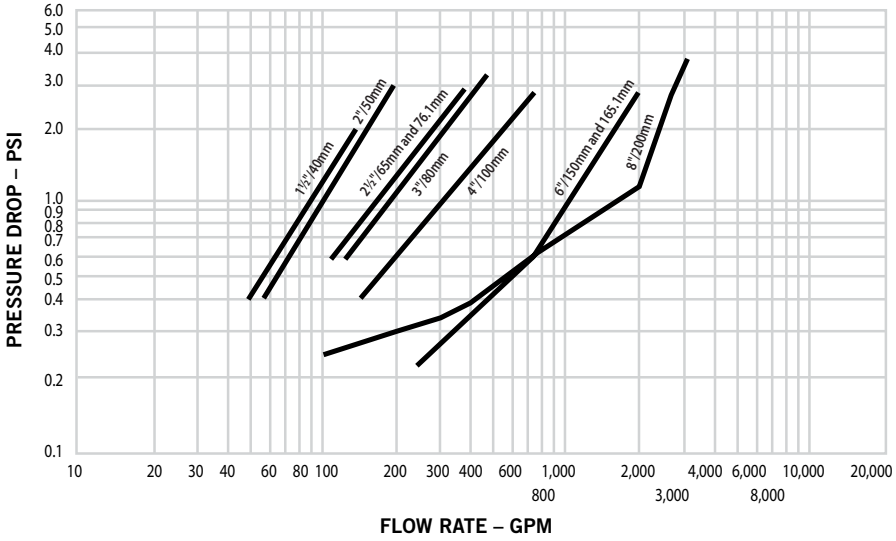

Frictional Resistance

The chart below expresses the frictional resistance of Victaulic Series 764 FireLock NXT. Alternate Valve in equivalent feet of straight pipe.

Size		Equivalent Length of Pipe
Nominal Size Inches mm	Actual Outside Dia. Inches mm	Feet meters
1 ½ 40	1.900 48.3	3.00 0.914
2 50	2.375 60.3	9.00 2.743
76.1 mm	3.000 76.1	8.00 2.438
3 80	3.500 88.9	17.00 5.182
4 100	4.500 114.3	21.00 6.401
165.1 mm	6.500 165.1	22.00 6.711
8 200	8.625 219.1	50.00 15.240

VICTAULIC IS A REGISTERED TRADEMARK OF VICTAULIC COMPANY. © 2007 VICTAULIC COMPANY. ALL RIGHTS RESERVED. PRINTED IN THE USA.

FireLock NXT™ Alternate Wet/Dry Valve

SERIES 764

OPERATION

The Series 764 Alternate Wet/Dry Valve contains a clapper, which has a replaceable rubber seal. The clapper makes contact with the valve's seat ring, which has access holes leading into an intermediate chamber in the valve. When the valve opens and the clapper lifts, water enters the intermediate chamber of the valve through the holes in the seat ring. The water flows from the intermediate chamber to the alarm line, which activates the system's alarms. The alarms continue to sound until the flow of water stops. When the flow of water stops, the spring-assisted valve clapper returns to the closed position. The Series 764 can be configured for use with wet or dry systems by simply adjusting four valves.

Operation when used in the dry valve configuration:

When the valve is set up, a direct acting diaphragm contacts the latch, and the latch holds the clapper in the closed position. The valve diaphragm is maintained in the extended position by the water supply pressure from upstream of the water supply control valve. The Series 776 Low Pressure Actuator (LPA) maintains the water pressure in the diaphragm chamber. The actuator is held closed by the system air pressure. The minimum required system air pressure is 90 kPa/13 psi. Excess air pressure above 90 kPa/13 psi will cause a delay in valve operation. Once the system's air pressure reduces to the trip point of 48 kPa/7 psi (i.e. an open sprinkler), the LPA opens and allows the water supply pressure in the diaphragm to release. This release allows the latch to retract and permits the clapper to pivot freely, thus allowing water into the system and the intermediate chamber through the holes in the seat ring. The water flows from the intermediate chamber to the alarm line and activates the system's alarms. These alarms continue to sound until the flow of water stops. The valve acts as an alarm check valve until the system is back in service as a dry system, according to the proper procedure.

Operation when used in the wet valve configuration:

When the valve is placed in service, the valve traps water pressure above the clapper and prevents the reverse flow of water. Minor pressure surges pass through the bypass loop without lifting the clapper from its seat. The swing check valve in the bypass line traps the pressure above the clapper; this can be observed in the pressure gauges. The system-side water pressure will always be equal to or greater than the supply-side water pressure in the absence of an open sprinkler. When a sustained flow of water occurs, such as an activated sprinkler or an open inspector's test connection, the clapper lifts from its closed position; this allows water to flow into the system and the intermediate chamber through the holes in the seat ring. The water flows from the intermediate chamber to the alarm line and activates the system's alarms. These alarms continue to sound until the flow of water stops.

C_V VALUES

C_v values for flow of water at +60°F/+16°C through a fully open valve are shown in the table below.

Formulas for C_v values:

$$\Delta P = \frac{Q^2}{C_v^2}$$

$$Q = C_v \times \sqrt{\Delta P}$$

Where:
Q = Flow (GPM)
ΔP = Pressure Drop (psi)
C_v = Flow Coefficient

Size		C_v/K_v	Size		C_v/K_v
Nominal Size Inches mm	Actual Outside Dia. Inches mm	(Fully Open Valve)	Nominal Size Inches mm	Actual Outside Dia. Inches mm	(Fully Open Valve)
1 ½ 40	1.900 48.3	60 52.0	3 80	3.500 88.9	200 173.0
2 50	2.375 60.3	110 95.0	4 100	4.500 114.3	350 302.8
2 ½ 65	2.875 73.0	180 156.0	165.1 mm	6.500 165.1	1000 865.0
76.1 mm	3.000 76.1	180 156.0	8 200	8.625 219.1	1500 1499.1

VICTAULIC IS A REGISTERED TRADEMARK OF VICTAULIC COMPANY. © 2007 VICTAULIC COMPANY. ALL RIGHTS RESERVED. PRINTED IN THE USA.

FireLock NXT™ Alternate Wet/Dry Valve

SERIES 764

MATERIAL SPECIFICATIONS

Body: Ductile iron conforming to ASTM A-536, grade 65-45-12. Ductile iron conforming to ASTM A-395, grade 65-45-15, is available upon special request.

Clapper: Aluminum bronze UNS-C95500

Shaft: Stainless 17-4

Seat O-rings: EPDM, ASTM D2000

Clapper Seal: Peroxide cured EPDM, ASTM D2000

Seat: Brass UNS C83600

Diaphragm: Peroxide cured EPDM with fabric reinforcement

Bill of Materials

1	Valve Body	**12**	Cover Plate
2	Clapper	**13**	Cover Plate Gasket
3	Clapper Seal	**14**	Cover Plate Bolts
4	Seal Ring	**15**	Latch
5	Seal Washer	**16**	Latch Spring
6	Seal Retaining Ring	**17**	Latch Spring Bushing and O-ring (Qty. 2)
7	Seal Assembly Bolt	**18**	Diaphragm
8	Bolt Seal	**19**	Diaphragm Cover
9	Clapper Spring	**20**	Diaphragm Cover Cap Screws (Qty. 8)
10	Clapper Shaft	**21**	Latch Shaft
11	Clapper Shaft Bushing and O-ring (Qty. 2)		

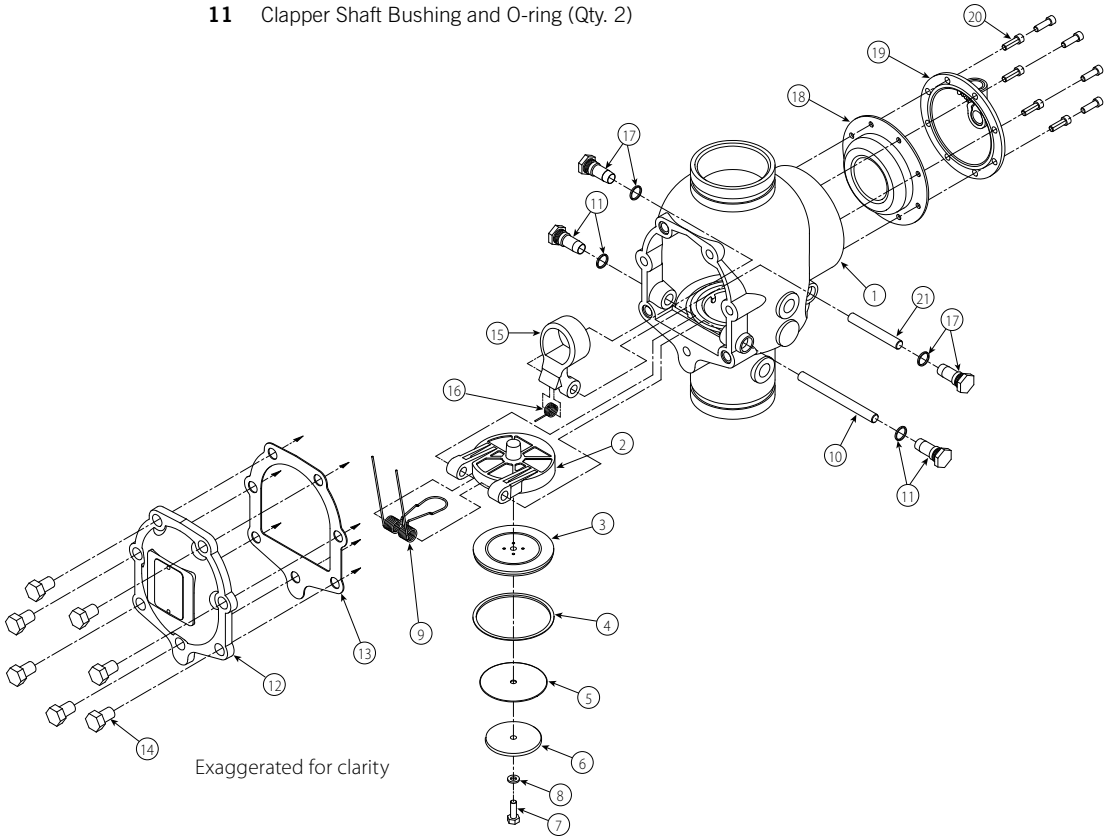

VICTAULIC IS A REGISTERED TRADEMARK OF VICTAULIC COMPANY. © 2007 VICTAULIC COMPANY. ALL RIGHTS RESERVED. PRINTED IN THE USA.

FireLock NXT™ Alternate Wet/Dry Valve

SERIES 764

TRIM PACKAGES

Trim Package Includes:

1 Galvanized components

2 Series 776 Low-Pressure Actuator – The Series 776 Low-Pressure Actuator is pneumatically actuated and requires only 13 psi/90 kPa minimum air pressure, regardless of the system supply pressure. This actuator allows the system to operate with a low air or gas pressure of 7 psi/48 kPa. Request submittal 30.65.

3 Air Feed Manifold

4 All Required Pipe and Fittings

5 All Standard Trim Accessories

6 All Required Gauges

Optional Trim Package for Components:

1 Black Trim for Foam Systems – If the valve is intended for use in a foam system, black trim must be ordered, per NFPA requirements. Specify this requirement on the order.

Optional Accessories:

- **Series 746-LPA Dry Accelerator –** The Series 746 Dry Accelerator is required when the Series 768 Dry Valve is installed in large systems to improve response time. Request submittal 30.64.
- **Series 760 Water Motor Alarm –** The Series 760 Water Motor Alarm is a mechanical device that sounds when a sustained flow of water occurs (such as with an open sprinkler). Request submittal 30.32.
- **Series 75B Supplemental Alarm Device –** The Series 75B Supplemental Alarm Device is designed to provide a continuous alarm for systems equipped with a mechanical device. Request submittal 30.33.
- **Series 75D Water Column Kit –** The Series 75D Water Column Kit is designed to minimize residual water in the riser from collecting above the clapper. Request submittal 30.34.
- **Alarm Pressure Switch –** Alarm Pressure Switches are designed to activate electrical alarms and control panels when a sustained flow of water occurs (such as with an open sprinkler).
- **Air Supervisory Pressure Switch –** Air Pressure Supervisory Switches are used to monitor system air pressure and are available as low-pressure and high-pressure sensitivity.
- **Air Supply System –** The air supply system contains all components for establishing and maintaining air in the system. The compressor, low-pressure alarms, ball valves, and required trim are included in the air supply system.
- **Air Compressor**
- **Air Dryer**
- **Air Maintenance Device**
- **Alarm Panels**
- **Drain Connection Kit**

VICTAULIC IS A REGISTERED TRADEMARK OF VICTAULIC COMPANY. © 2007 VICTAULIC COMPANY. ALL RIGHTS RESERVED. PRINTED IN THE USA.

FireLock NXT™ Alternate Wet/Dry Valve

SERIES 764

AIR SUPPLY REQUIREMENTS

The required air pressure for Series 764 FireLock NXT Alternate Valves is 13 psi/90 kPa minimum, regardless of the system supply pressure. Air pressures should be kept below 18 psi/124 kPa, unless a Series 746-LPA Dry Accelerator is installed. Systems with air pressures higher than 18 psi/124 kPa require the addition of a Series 746-LPA Dry Accelerator.

If multiple Series 764 FireLock NXT Alternate Valves are installed with a common air supply, isolate the systems with a spring-loaded, soft-seated ball check valve to ensure air integrity for each system. Good practice is to include a ball valve for isolation and service of each individual system.

Set the air pressure to the required system air pressure. Air pressure differing from the required system air pressure could reduce system operation response time.

The engineer/system designer is responsible for sizing the compressor so that the entire system is charged to the required air pressure within 30 minutes. DO NOT oversize the compressor to provide more airflow. An oversized compressor will slow down or possibly prevent valve operation.

If the compressor fills the system too fast, it may be necessary to restrict the air supply. Restricting the air supply will ensure that air being exhausted from an open sprinkler or manual release valve is not replaced by the air supply system as fast as it is being exhausted.

COMPRESSOR SIZING

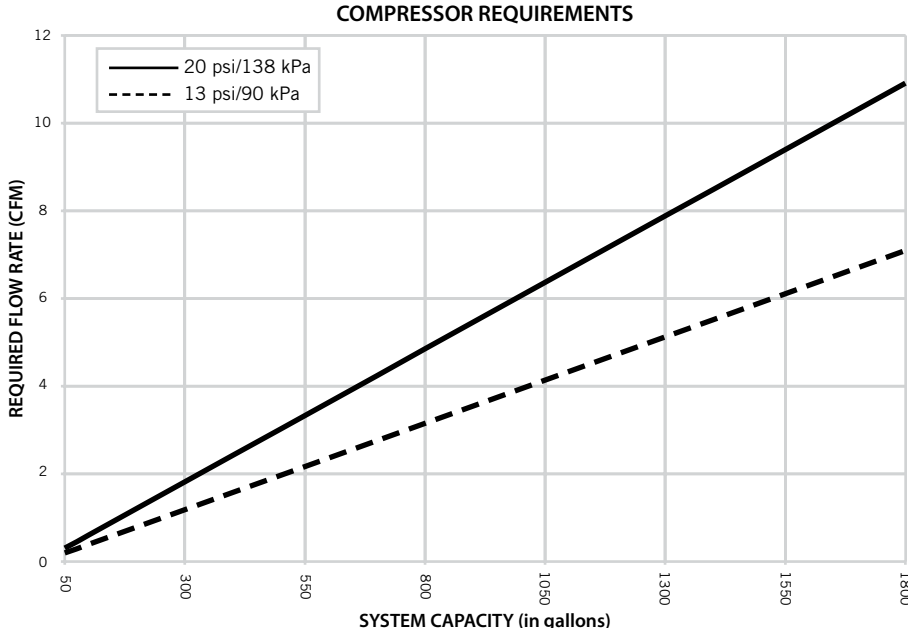

VICTAULIC IS A REGISTERED TRADEMARK OF VICTAULIC COMPANY. © 2007 VICTAULIC COMPANY. ALL RIGHTS RESERVED. PRINTED IN THE USA.

FireLock NXT™ Alternate Wet/Dry Valve

SERIES 764

BASE OR RISER MOUNTED COMPRESSORS

For base or riser-mounted compressors, the recommended air pressure of 13 psi/90 kPa is the "on" or "low" pressure setting for the compressor. The "off" or "high" pressure setting should be 18 psi/124 kPa.

When a base or riser-mounted air compressor supplies air to a Series 764 FireLock NXT Alternate Valve, it is not necessary to install the Victaulic Series 757 Regulated Air Maintenance Trim Assembly (AMTA). In this case, the airline of the compressor connects to the trim at the fitting where the Series 757 Regulated AMTA is normally installed (refer to the applicable trim drawing). If the compressor is not equipped with a pressure switch, the Series 757P Air Maintenance Trim Assembly with Pressure Switch should be installed.

SHOP AIR OR TANK MOUNTED AIR COMPRESSORS

In the event a compressor becomes inoperative, a properly sized tank-mounted air compressor provides the greatest protection for systems.

When shop air or a tank-mounted air compressor is used, the Series 757 Regulated AMTA must be installed. The Series 757 Regulated AMTA provides proper air regulation from the air reservoir to the sprinkler system.

For tank-mounted air compressors, the recommended air pressure of 13 psi/90 kPa should be used as the set point for the air regulator. The "on" pressure of the compressor should be at least 5 psi/34 kPa above the set point of the air regulator.

VICTAULIC IS A REGISTERED TRADEMARK OF VICTAULIC COMPANY. © 2007 VICTAULIC COMPANY. ALL RIGHTS RESERVED. PRINTED IN THE USA.

FireLock NXT™ Alternate Wet/Dry Valve

SERIES 764

SERIES 757 REGULATED AIR MAINTENANCE TRIM ASSEMBLY

NOTICE

- **Victaulic recommends a maximum of two Series 764 FireLock NXT Alternate Valves per Series 757 Regulated AMTA**

Bill of Materials

1. ⅛"/3.2 mm Restrictor
2. Slow Fill Ball Valve (Normally Open)
3. Air Regulator
4. Strainer (100 Mesh)
5. Spring-Loaded, Soft-Seated Ball Check Valve
6. Fast Fill Ball Valve (Normally Closed)

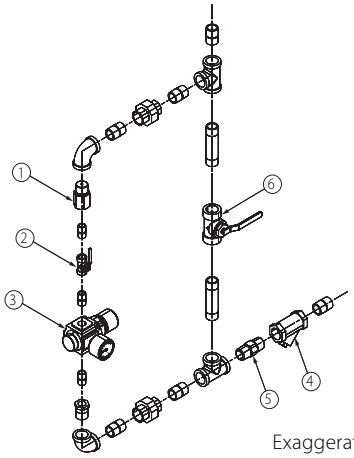

Exaggerated for clarity

SERIES 757P AIR MAINTENANCE TRIM ASSEMBLY WITH PRESSURE SWITCH

NOTICE

- **Victaulic recommends a maximum of two Series 764 FireLock NXT Alternate Valves per Series 757P AMTA with Pressure Switch**

Bill of Materials

1. ⅛-inch/3.2 mm Restrictor
2. Pressure Switch
3. Slow Fill Ball Valve (Normally Open)
4. Fast Fill Ball Valve (Normally Closed)
5. Strainer (100 Mesh)
6. Spring-Loaded, Soft-Seated Ball Check Valve

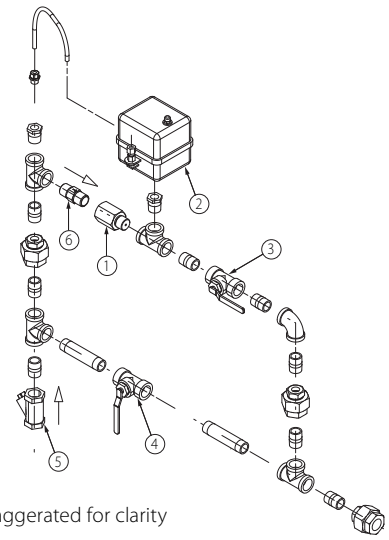

Exaggerated for clarity

VICTAULIC IS A REGISTERED TRADEMARK OF VICTAULIC COMPANY. © 2007 VICTAULIC COMPANY. ALL RIGHTS RESERVED. PRINTED IN THE USA.

FireLock NXT™ Alternate Wet/Dry Valve

SERIES 764

COMPRESSOR REQUIREMENTS

Compressor Requirements and Settings for Series 764 FireLock NXT Alternate Valves Installed with Series 746-LPA Dry Accelerators

Set the air regulator of the Series 757 Regulated AMTA to 13 psi/90 kPa.

THE SERIES 757P AIR MAINTENANCE TRIM ASSEMBLY WITH PRESSURE SWITCH MUST NOT BE USED ON A SERIES 764 FIRELOCK NXT ALTERNATE VALVE INSTALLED WITH A SERIES 746-LPA DRY ACCELERATOR.

When a Series 764 FireLock NXT Alternate Valve is installed with a Series 746-LPA Dry Accelerator, the Series 757 Regulated AMTA must be used. **NOTE:** The use of an air regulator with a base or riser-mounted compressor could cause short cycling, resulting in premature wear of the compressor.

In the event a compressor becomes inoperative, a properly sized tank-mounted air compressor provides the greatest protection for systems installed with a Series 746-LPA Dry Accelerator. In this situation, air can be supplied continuously to the sprinkler system for an extended time period. **NOTE:** The Series 757 Regulated AMTA should be used with a tank-mounted air compressor that supplies air to a Series 764 FireLock NXT Alternate Valve installed with a Series 746-LPA Dry Accelerator.

The air regulator of the Series 757 Regulated AMTA is a relief-type design. Any pressure in the system that is above the set point of the air regulator will be released. Therefore, charging the air regulator above the set point could cause premature operation of a valve installed with a Series 746-LPA Dry Accelerator.

Settings for Air Supervisory Pressure Switches and Alarm Pressure Switches

Air supervisory pressure switches are required for dry systems and must be set according to the following instructions. **NOTE:** Switches for Vic-Quick Risers are pre-set at the factory.

Wire the air supervisory pressure switches to activate a low-pressure alarm signal. **NOTE:** In addition, the local authority having jurisdiction may require a high-pressure alarm. Contact the local authority having jurisdiction for this requirement.

Set the air supervisory pressure switches to activate at 2 – 4 psi/14 – 28 kPa below the minimum air pressure required, but not lower than 10 psi/69 kPa.

Wire the alarm pressure switch to activate a water flow alarm.

Set the alarm pressure switch to activate on a pressure rise of 4 – 8 psi/28 – 55 kPa.

Remote System Test Valve Requirements

The remote system test valve (inspector's test connection) should contain a UL Listed and/or FM Approved valve (normally closed), which can be opened to simulate the operation of a sprinkler.

The remote system test valve (inspector's test connection) should be located at the most hydraulically demanding location in the release system. **NOTE:** Multiple restrictions on the remote system test valve (inspector's test connection) may slow the air decay rate and cause the system to respond slower than required.

The remote system test valve (inspector's test connection) should terminate with an orifice equal to the smallest orifice in the releasing system.

The remote system test valve (inspector's test connection) is used to ensure that water reaches the most remote part of the system within 60 seconds.

VICTAULIC IS A REGISTERED TRADEMARK OF VICTAULIC COMPANY. © 2007 VICTAULIC COMPANY. ALL RIGHTS RESERVED. PRINTED IN THE USA.

FireLock NXT™ Alternate Wet/Dry Valve

SERIES 764

EXPLODED VIEW DRAWING – TRIM COMPONENTS

Series 764 FireLock NXT Alternate Valve
(Optional Accessories Also Shown)

Bill of Materials

1 Series 764 FireLock NXT Alternate Wet/Dry Valve
2 FireLock Rigid Coupling (Optional)
3 Water Supply Main Control Valve (Optional)
4 Drain Swing Check Valve
5 Drip Cup
6 Alarm Pressure Switch (Optional)
7 Series 729 Drip Check Valve
8 Diaphragm-Charge-Line Ball Valve (Lockable – Open/Dry, Closed/Wet)
9 3-in-1 Strainer/Check/Restrictor Assembly
10 Series 760 Water Motor Alarm (Optional)
11 Alarm Test Ball Valve
12 Diaphragm-Charge-Line Pressure Gauge (0 – 300 psi/0 – 2068 kPa)
13 Series 749 Auto Drain
14 Series 746-LPA Dry Accelerator Assembly (Optional)
15 Series 776 Low-Pressure Actuator
16 Air Manifold
17 Air Supervisory Pressure Switch (Optional)
18 System Pressure Gauge (0 – 80 psi/0 – 552 kPa with Retard)
19 Water Supply Main Drain Valve - Flow Test
20 Water Supply Pressure Gauge (0 – 300 psi/0 – 2068 kPa)
21 Drain Connection Kit (Optional)
22 Gauge Valve
23 System Main Drain Valve
24 Series 748 Ball Check Valve
25 Dry System Air Supply Ball Valve (Lockable – Open/Dry, Closed/Wet)
26 Wet System Bypass Ball Valve (Lockable – Closed/Dry, Open/Wet)
27 Dry Check Isolation Ball Valve (Lockable – Open/Dry, Closed/Wet)
28 Alarm Line Drain Ball Valve (Lockable – Closed/Dry, Open/Wet)
29 Series 755 Manual Pull Station

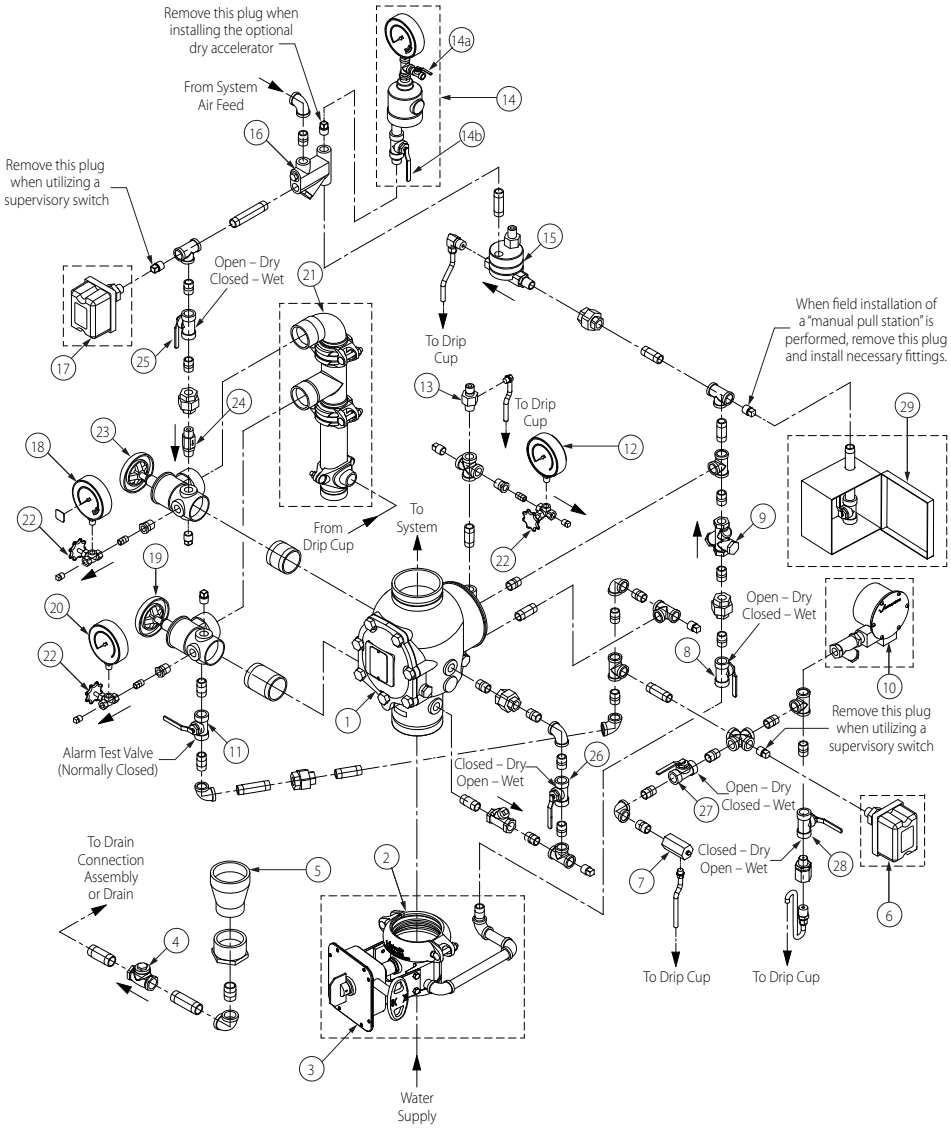

Exaggerated for clarity

VICTAULIC IS A REGISTERED TRADEMARK OF VICTAULIC COMPANY. © 2007 VICTAULIC COMPANY. ALL RIGHTS RESERVED. PRINTED IN THE USA.

FireLock NXT™ Alternate Wet/Dry Valve

SERIES 764

WARNING

⚠ WARNING

- **This product must be installed by an experienced, trained installer, in accordance with the instructions provided with each valve. These instructions contain important information.**

Failure to follow these instructions may result in serious personal injury, property damage, or valve leakage.

If you need additional copies of this product literature or the valve installation instructions, or if you have any questions about the safe installation and use of this device, contact Victaulic Company, P.O. Box 31, Easton, PA 18044-0031 USA, Telephone: 001-610-559-3300.

WARRANTY

Refer to the Warranty section of the current Price List or contact Victaulic for details.

NOTE

This product shall be manufactured by Victaulic or to Victaulic specifications. All products to be installed in accordance with current Victaulic installation/assembly instructions. Victaulic reserves the right to change product specifications, designs and standard equipment without notice and without incurring obligations.

WCAS-6UVMSE

For complete contact information, visit www.victaulic.com

30.83 4630 REV A UPDATED 6/2007

VICTAULIC IS A REGISTERED TRADEMARK OF VICTAULIC COMPANY. © 2007 VICTAULIC COMPANY. ALL RIGHTS RESERVED. PRINTED IN THE USA.